BS2e-IC MODULE Rev. A

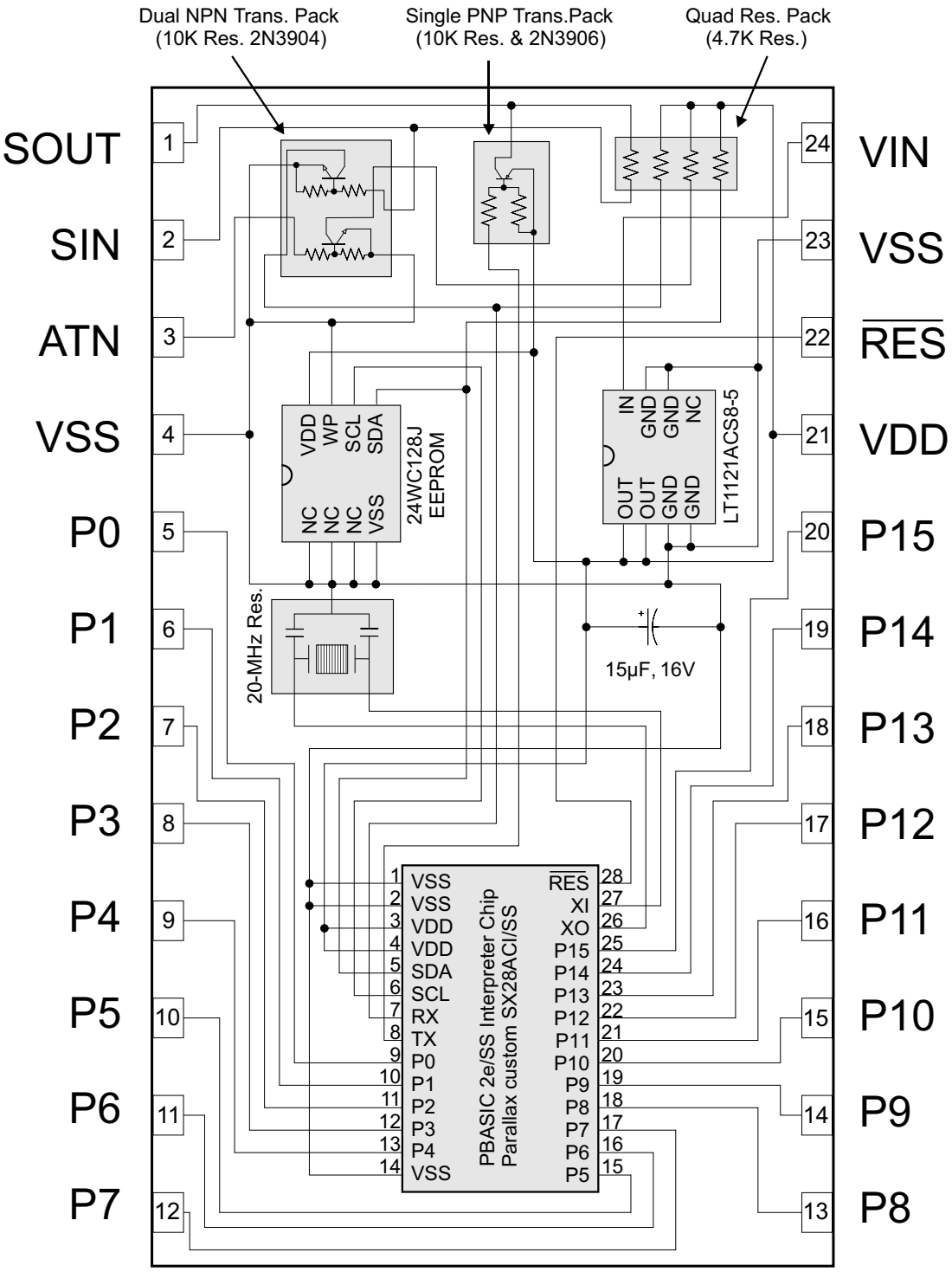

Connect DSR and RTS for automatic port detection.

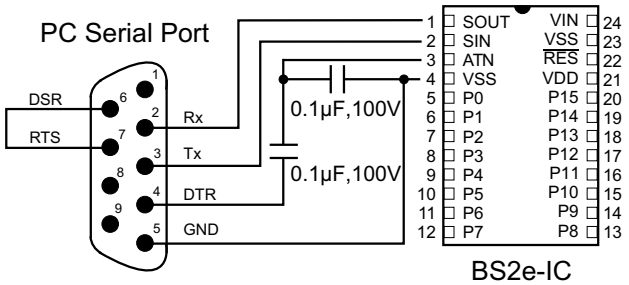

PC - to - BS2e-IC connection